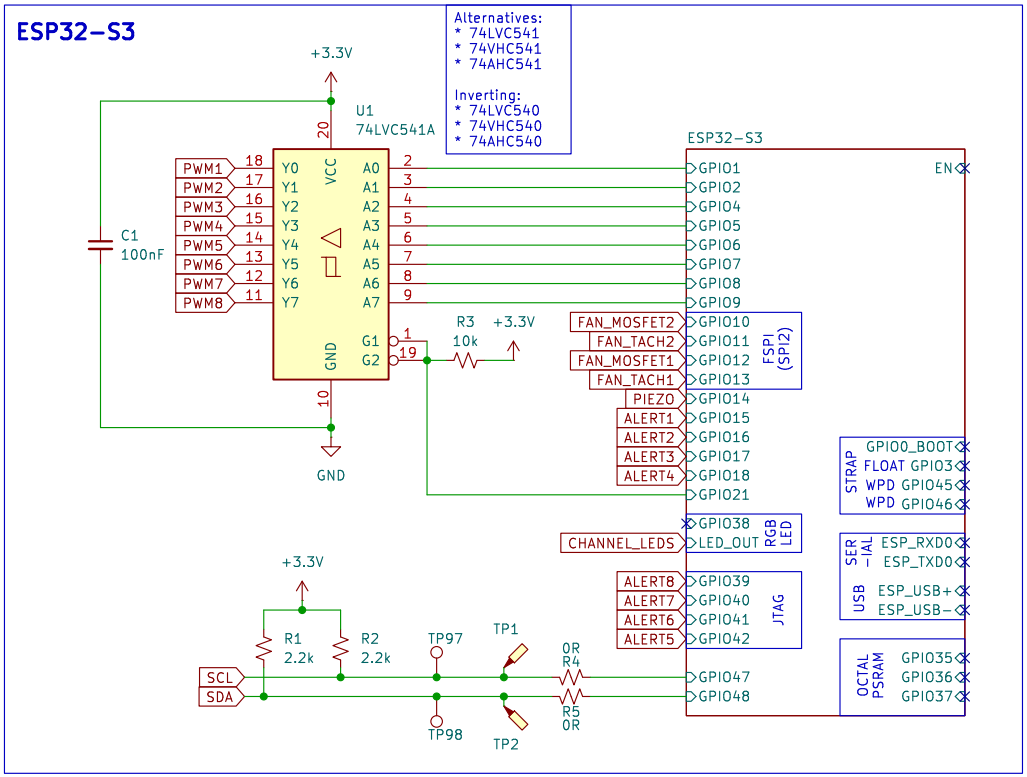

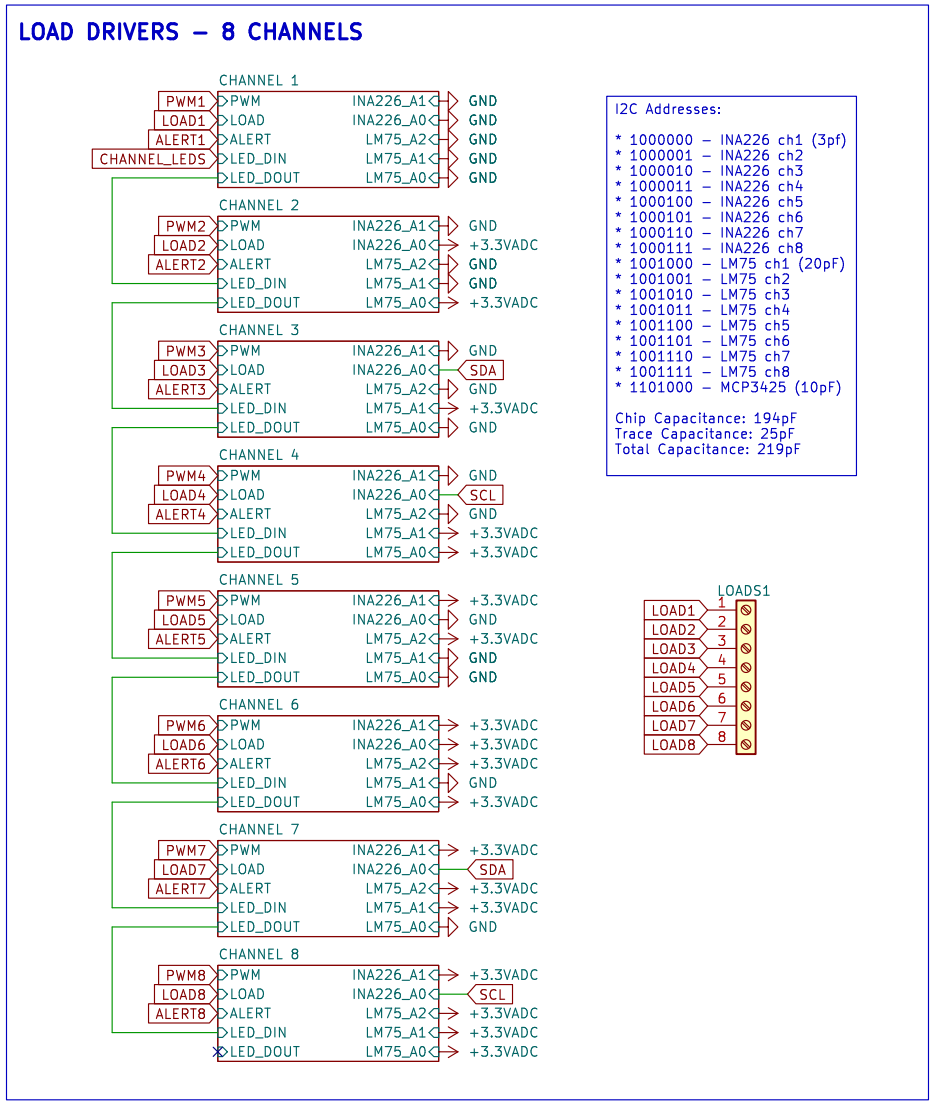

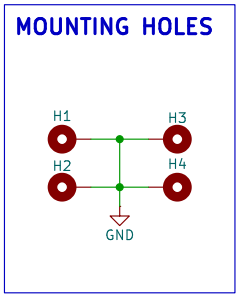

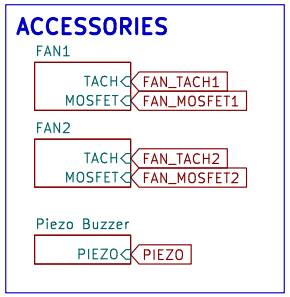

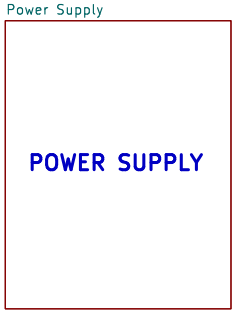

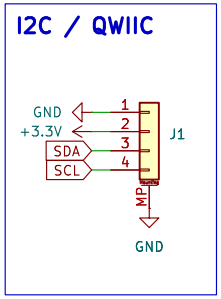

https://github.com/hoeken/frothfet

Sheet: /
File: frothfet.kicad_sch

Title: FrothFET 8CH

Size: A4	Date: 2026-01-10	Rev: F
KiCad E.D.A. 9.0.6		Id: 1/14

Load Driver Circuit

Gate Driver Circuit

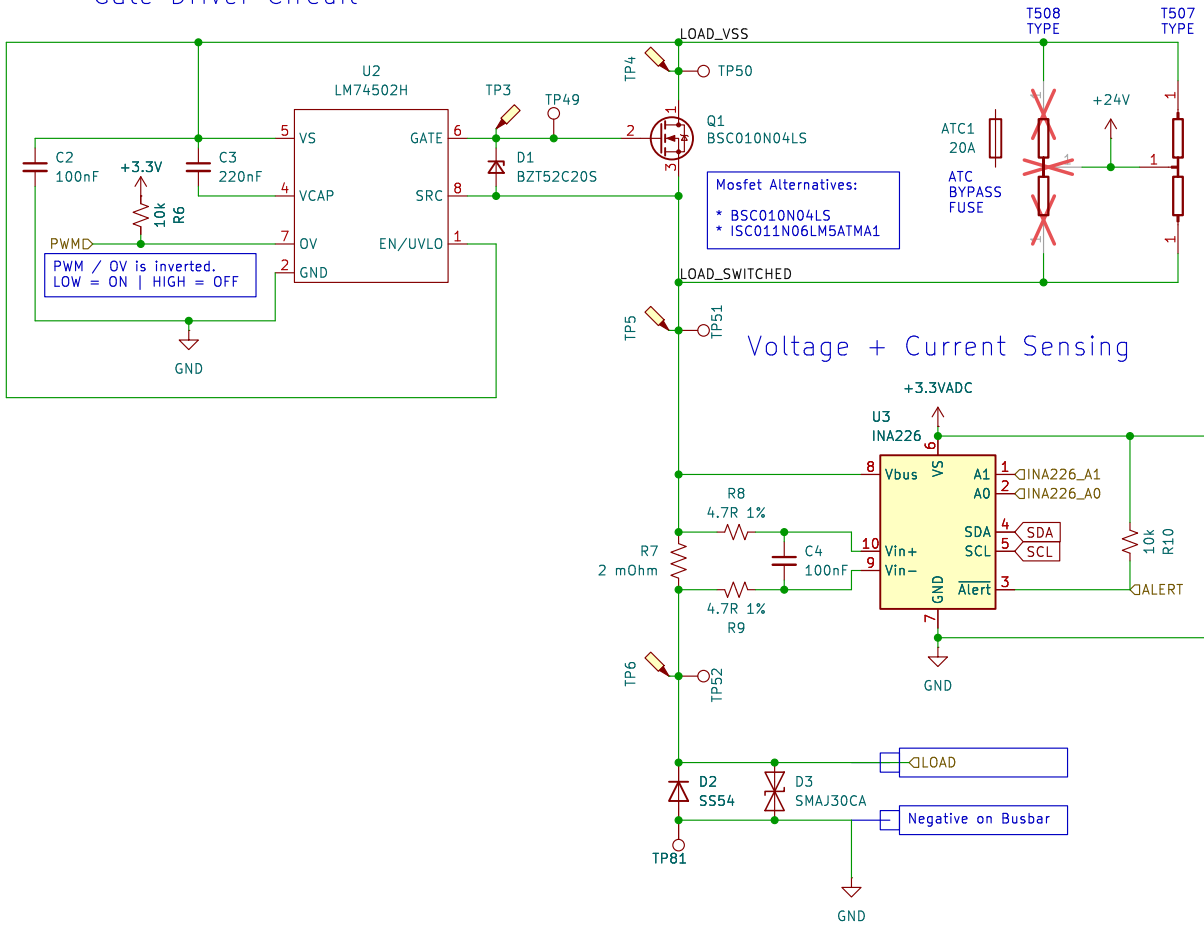

Status LED

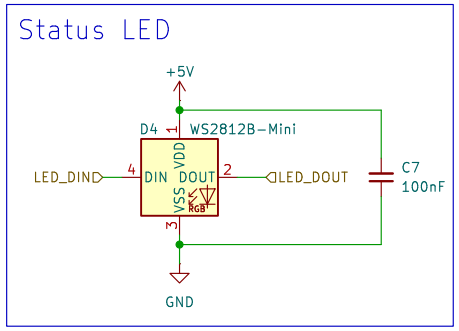

Temperature Sensing

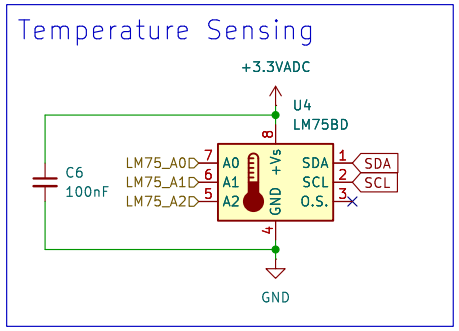

https://github.com/hoeken/frothfet

Sheet: /CHANNEL 1/
File: mosfet.kicad_sch

Title: FrothFET 8CH

Size: A4	Date: 2026-01-10	Rev: F
KiCad E.D.A. 9.0.6		Id: 2/14

Load Driver Circuit

Gate Driver Circuit

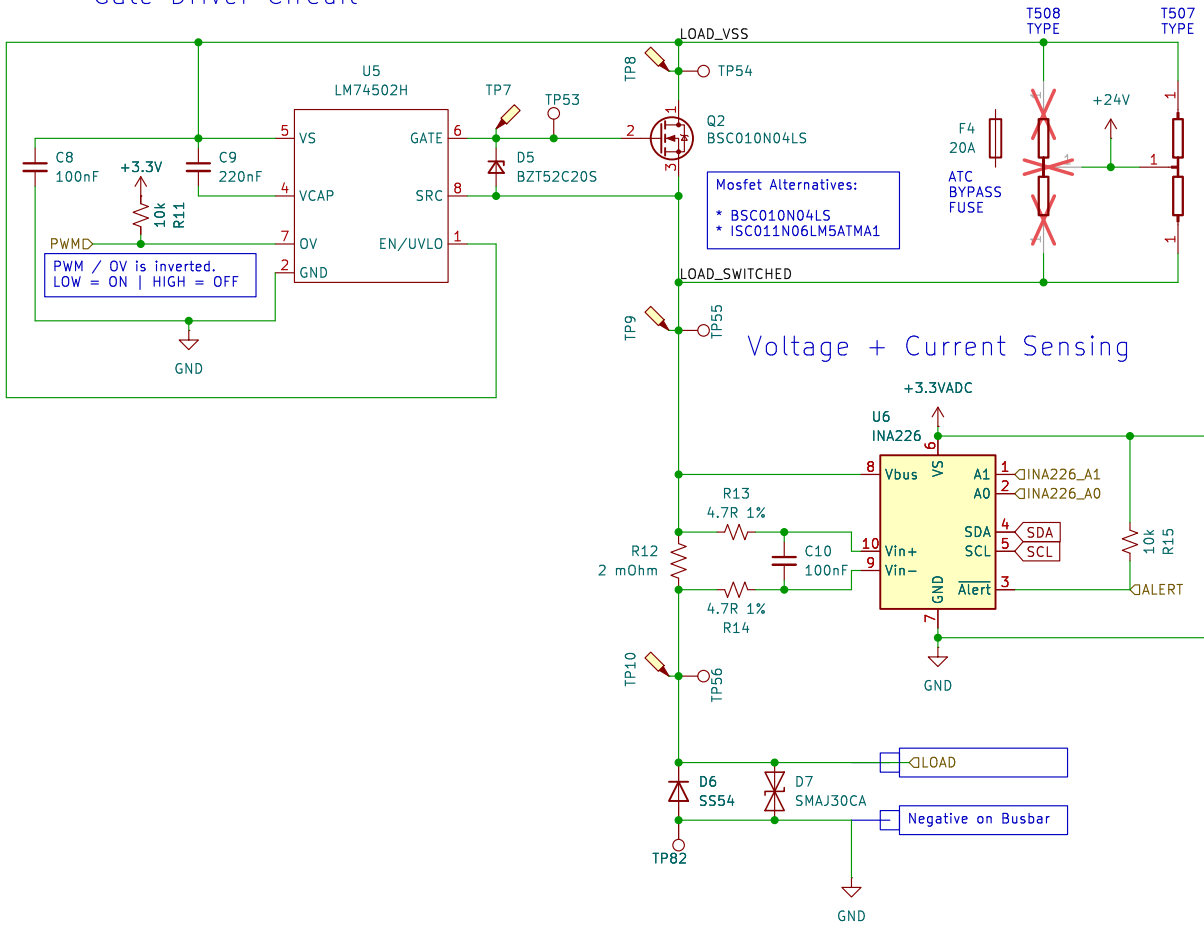

Status LED

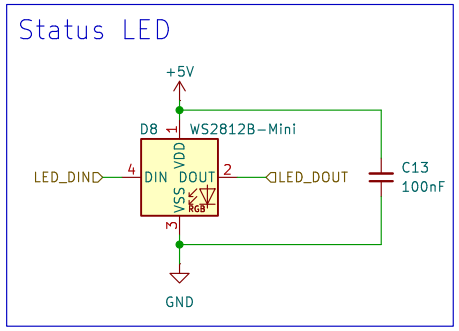

Temperature Sensing

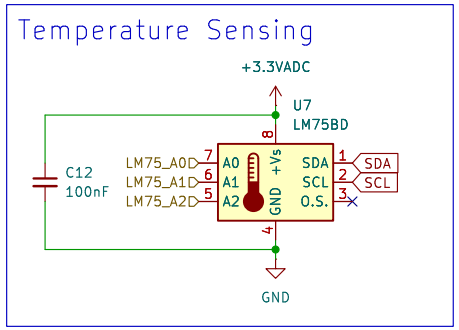

https://github.com/hoeken/frothfet

Sheet: /CHANNEL 2/

File: mosfet.kicad_sch

Title: FrothFET 8CH

Size: A4	Date: 2026-01-10	Rev: F
KiCad E.D.A. 9.0.6		Id: 3/14

Load Driver Circuit

Gate Driver Circuit

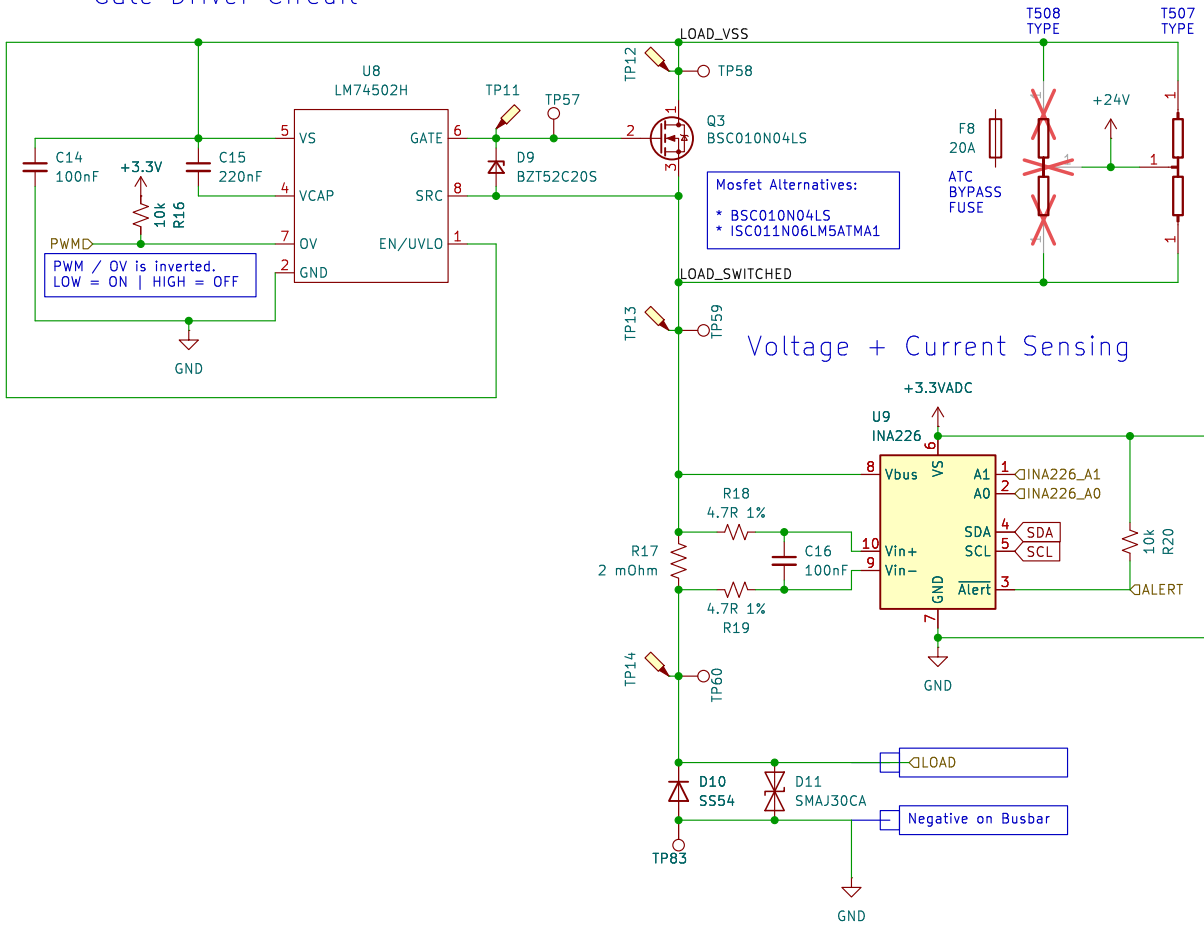

Status LED

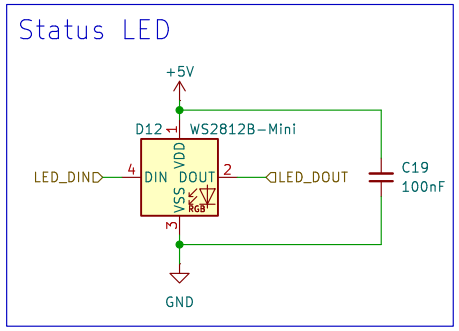

Temperature Sensing

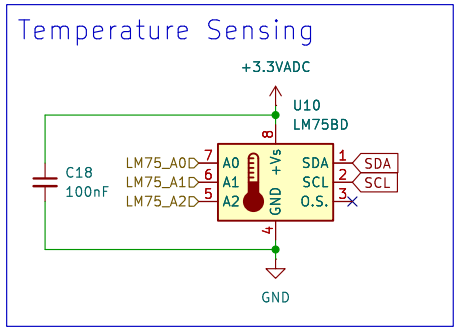

https://github.com/hoeken/frothfet

Sheet: /CHANNEL 3/

File: mosfet.kicad_sch

Title: FrothFET 8CH

Size: A4	Date: 2026-01-10	Rev: F
KiCad E.D.A. 9.0.6		Id: 4/14

Load Driver Circuit

Gate Driver Circuit

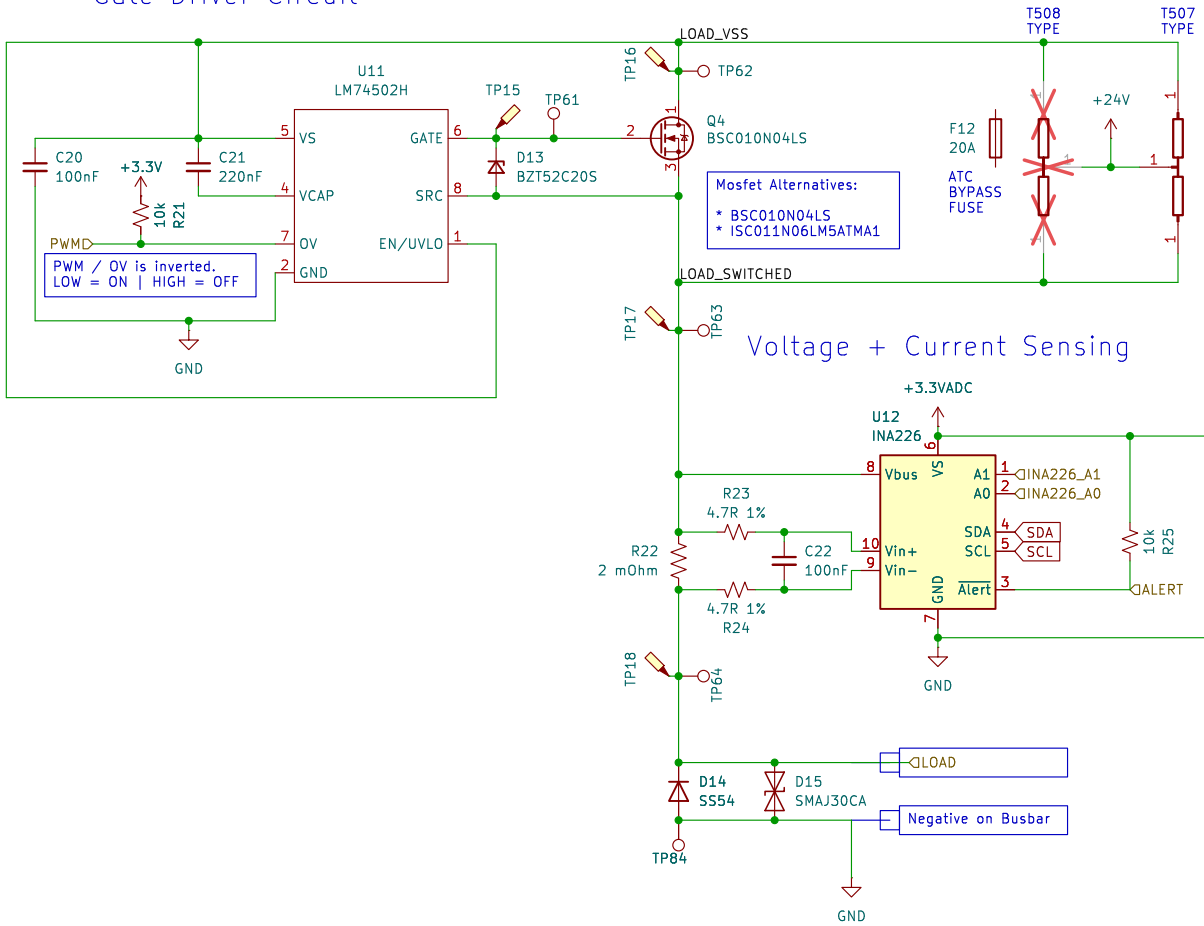

Status LED

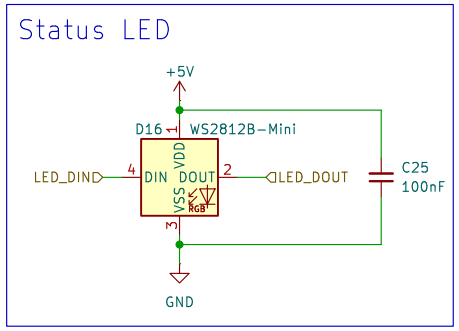

Temperature Sensing

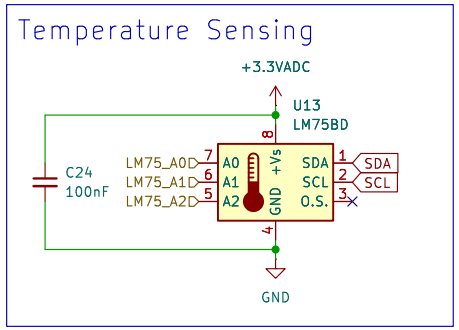

https://github.com/hoeken/frothfet

Sheet: /CHANNEL 4/

File: mosfet.kicad_sch

Title: FrothFET 8CH

Size: A4	Date: 2026-01-10	Rev: F
KiCad E.D.A. 9.0.6		Id: 5/14

Load Driver Circuit

Gate Driver Circuit

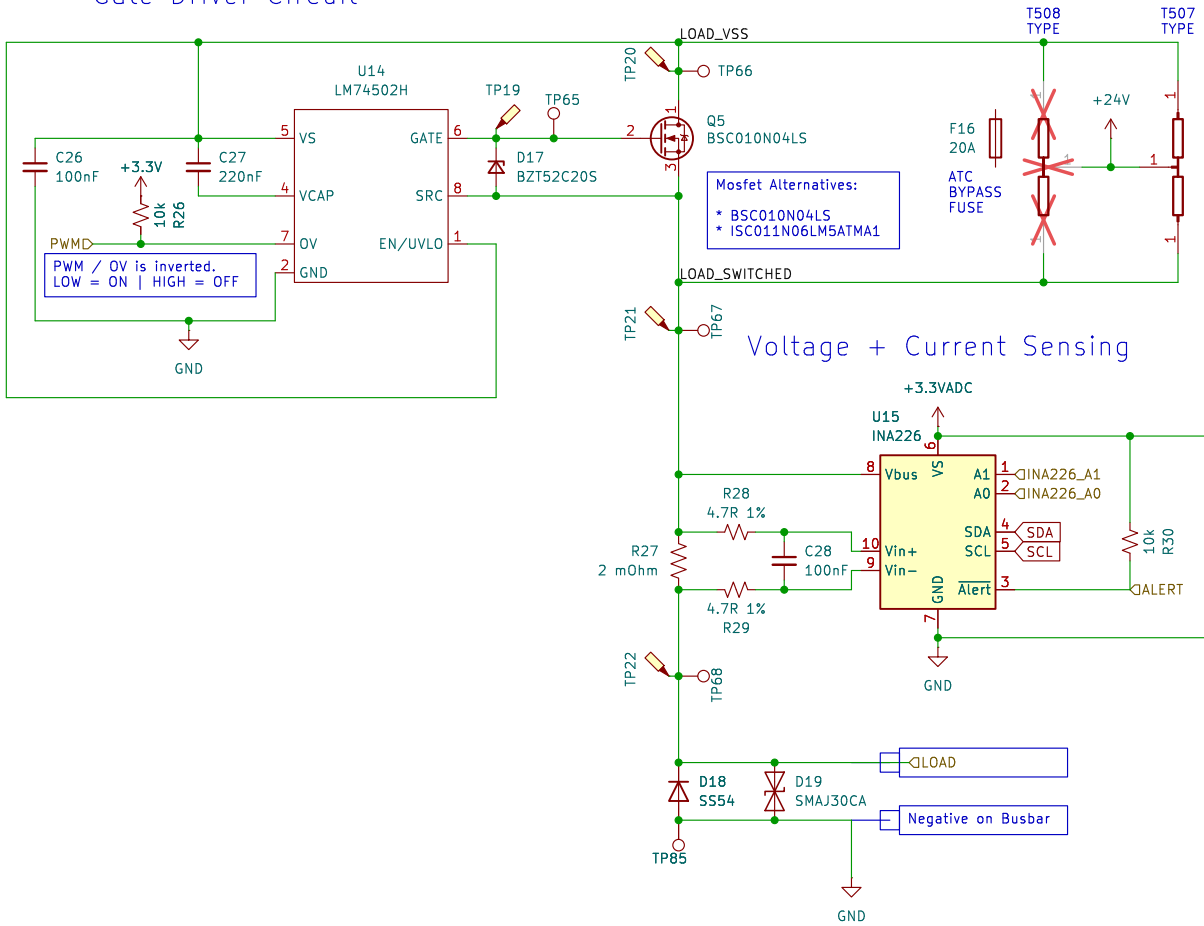

Status LED

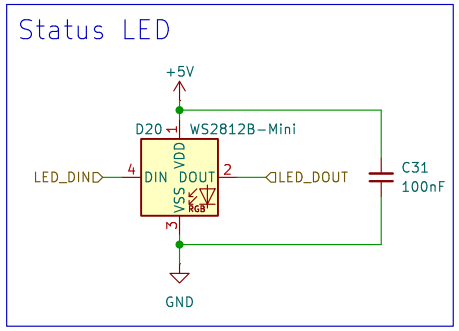

Temperature Sensing

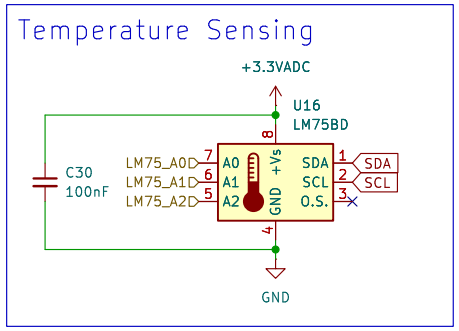

https://github.com/hoeken/frothfet

Sheet: /CHANNEL 5/

File: mosfet.kicad_sch

Title: FrothFET 8CH

Size: A4	Date: 2026-01-10	Rev: F
KiCad E.D.A. 9.0.6		Id: 6/14

Load Driver Circuit

Gate Driver Circuit

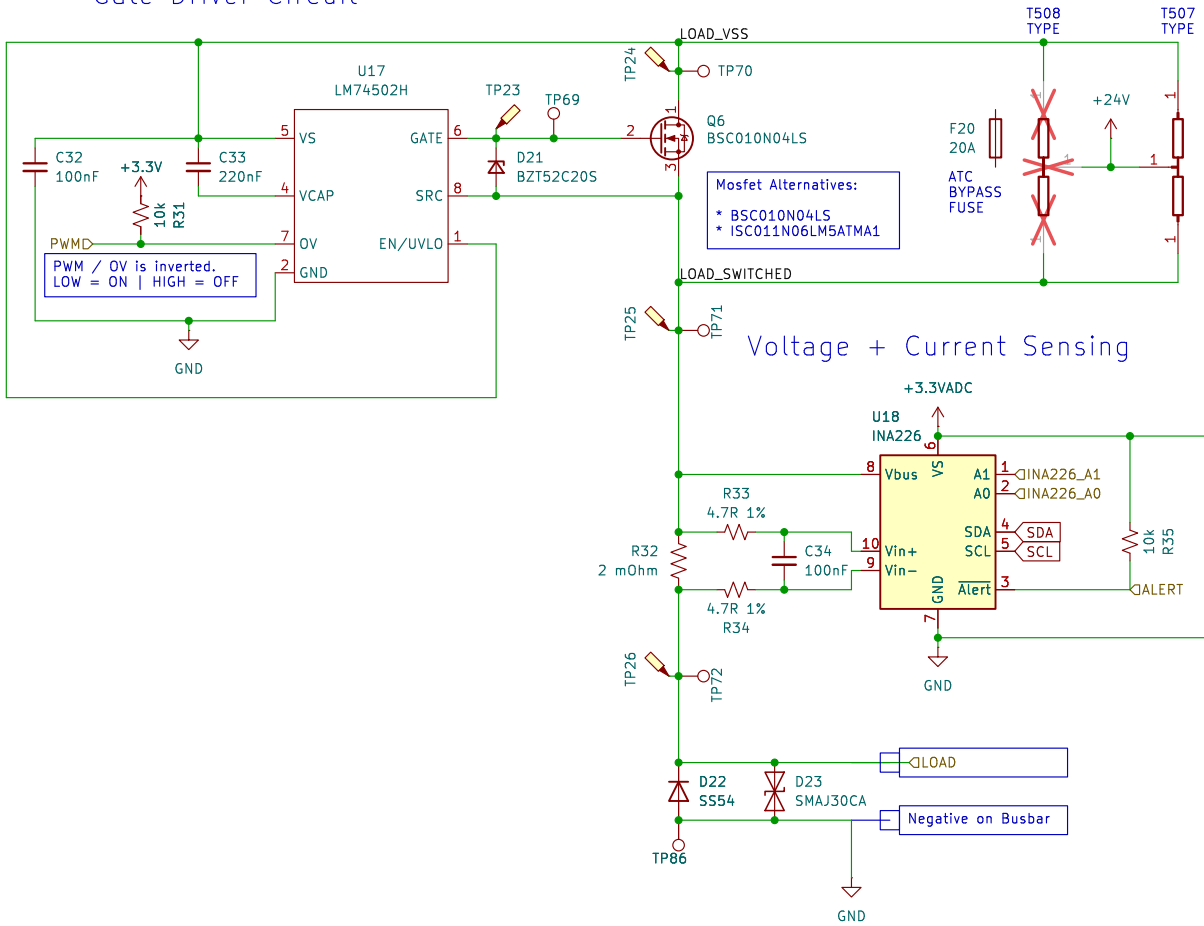

Status LED

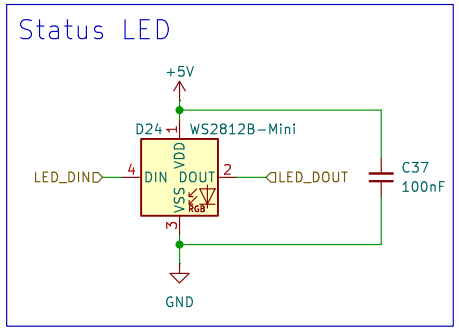

Temperature Sensing

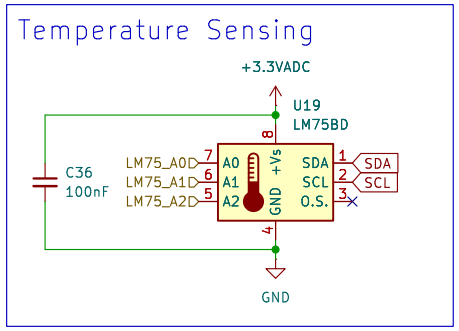

https://github.com/hoeken/frothfet

Sheet: /CHANNEL 6/

File: mosfet.kicad_sch

Title: FrothFET 8CH

Size: A4	Date: 2026-01-10	Rev: F
KiCad E.D.A. 9.0.6		Id: 7/14

Load Driver Circuit

Gate Driver Circuit

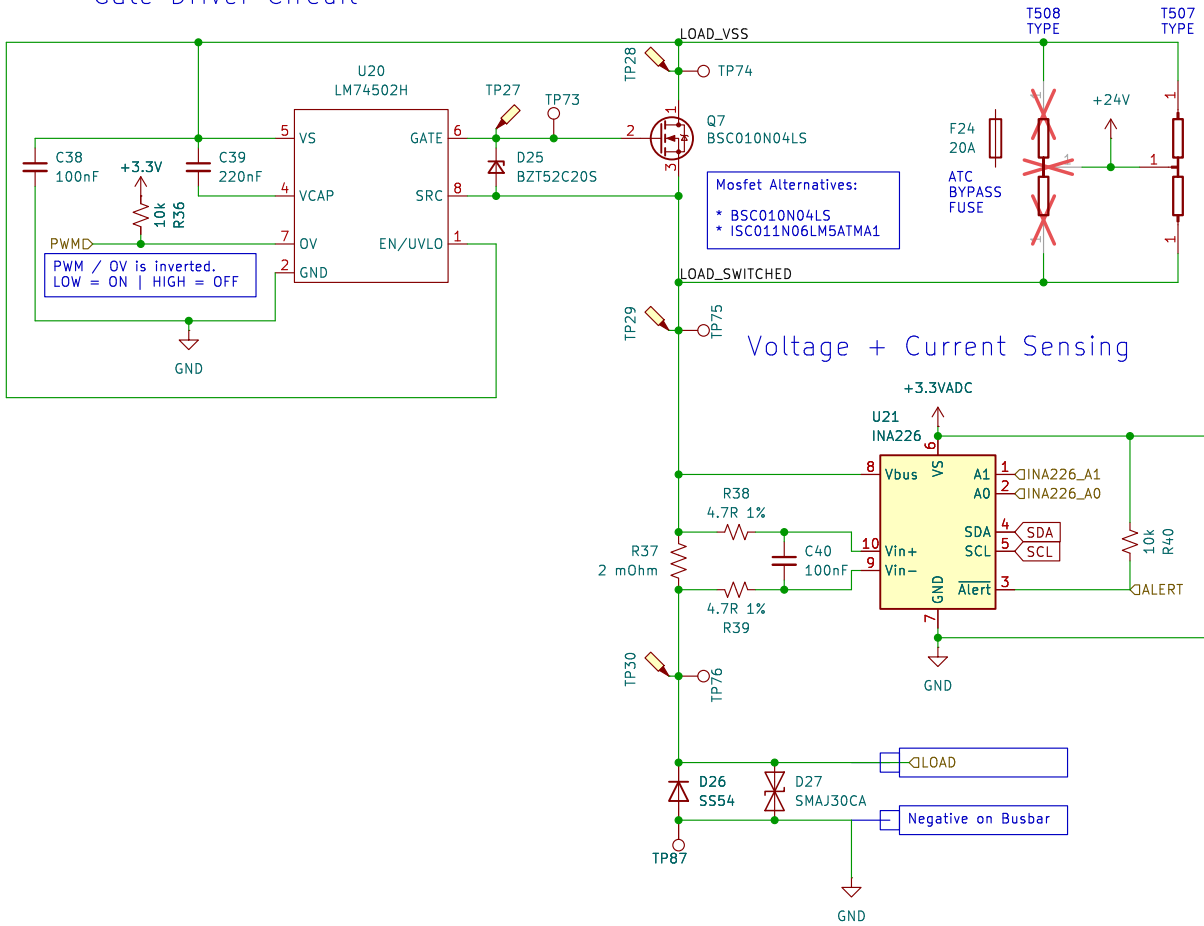

Status LED

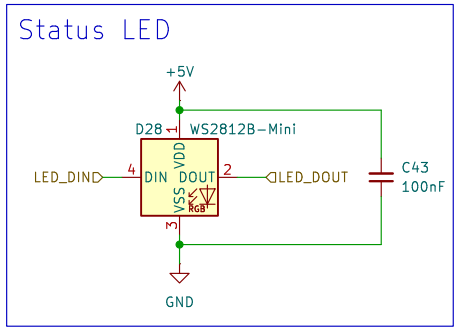

Temperature Sensing

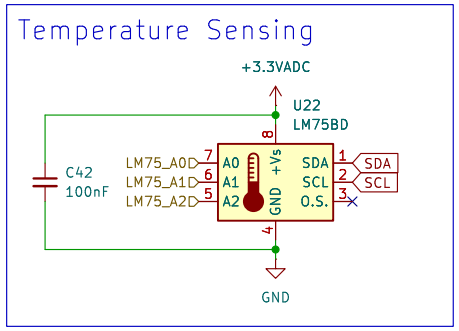

https://github.com/hoeken/frothfet

Sheet: /CHANNEL 7/

File: mosfet.kicad_sch

Title: FrothFET 8CH

Size: A4	Date: 2026-01-10	Rev: F
KiCad E.D.A. 9.0.6		Id: 8/14

Load Driver Circuit

Gate Driver Circuit

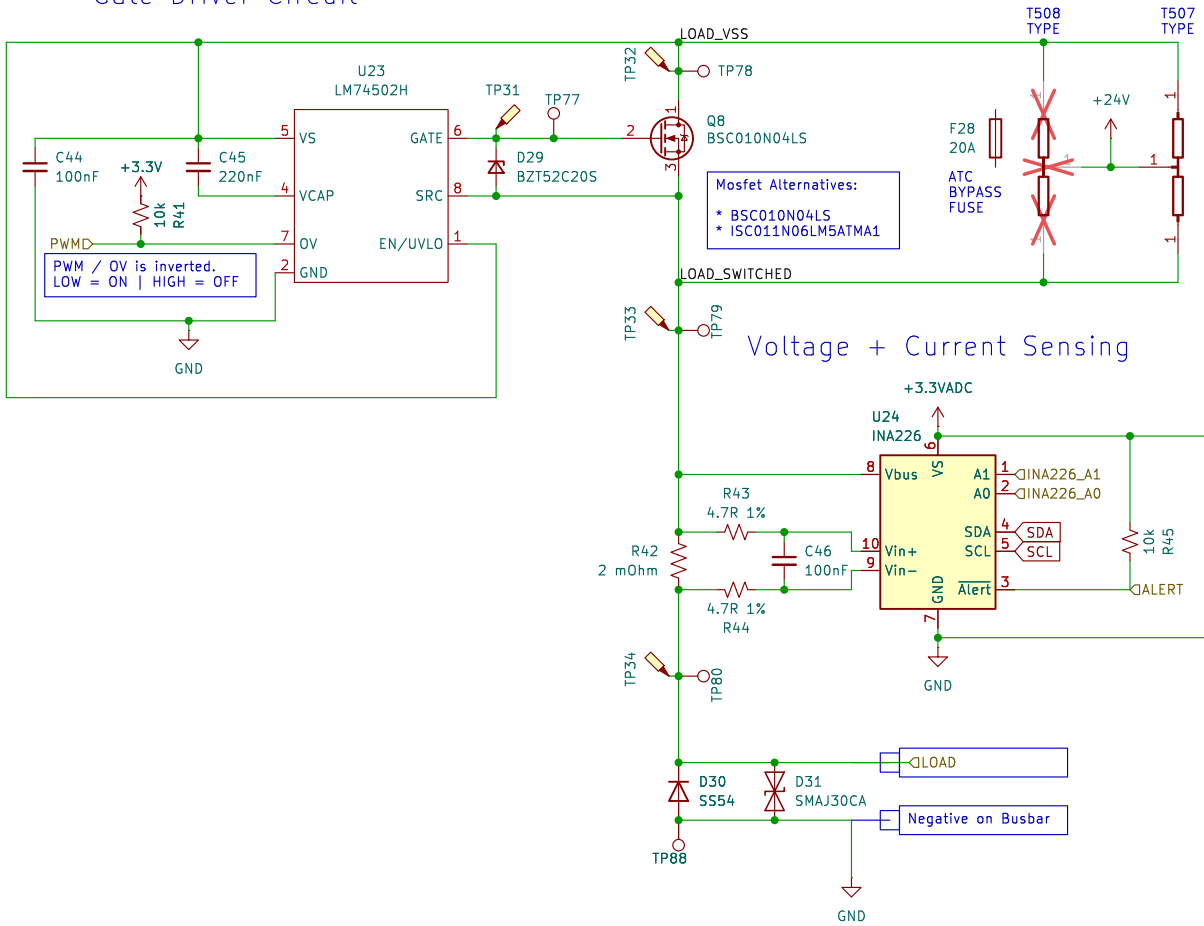

Status LED

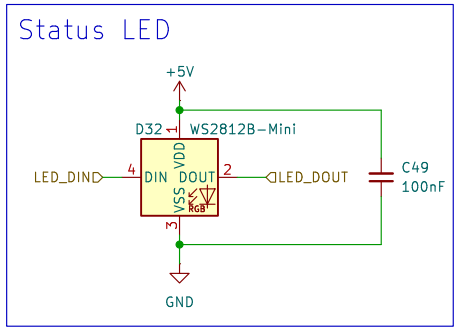

Temperature Sensing

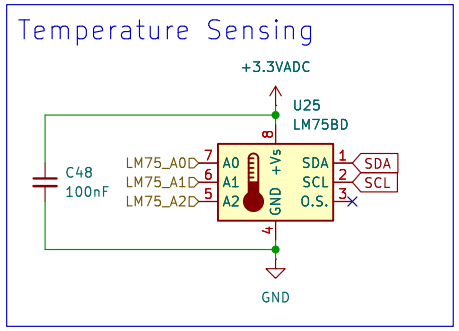

https://github.com/hoeken/frothfet

Sheet: /CHANNEL 8/

File: mosfet.kicad_sch

Title: FrothFET 8CH

Size: A4	Date: 2026-01-10	Rev: F
KiCad E.D.A. 9.0.6		Id: 9/14

Fan Control

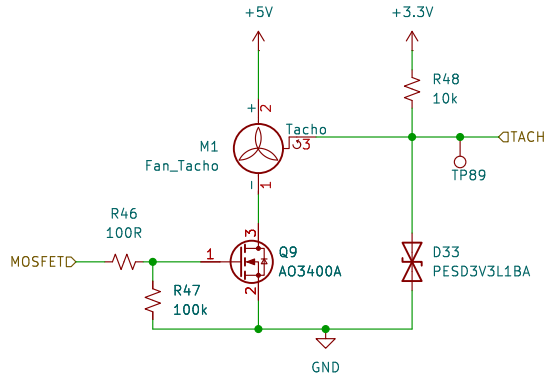

https://github.com/hoeken/frothfet

Sheet: /FAN1/
File: pwm fan.kicad_sch

Title: FrothFET 8CH

Size: A4	Date: 2026-01-10	Rev: F
KiCad E.D.A. 9.0.6		Id: 10/14

Fan Control

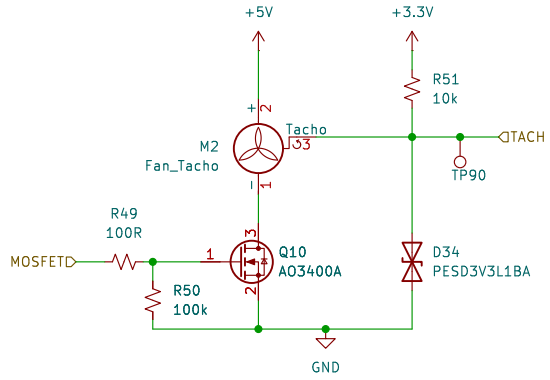

https://github.com/hoeken/frothfet

Sheet: /FAN2/
File: pwm fan.kicad_sch

Title: FrothFET 8CH

Size: A4	Date: 2026-01-10	Rev: F
KiCad E.D.A. 9.0.6		Id: 11/14

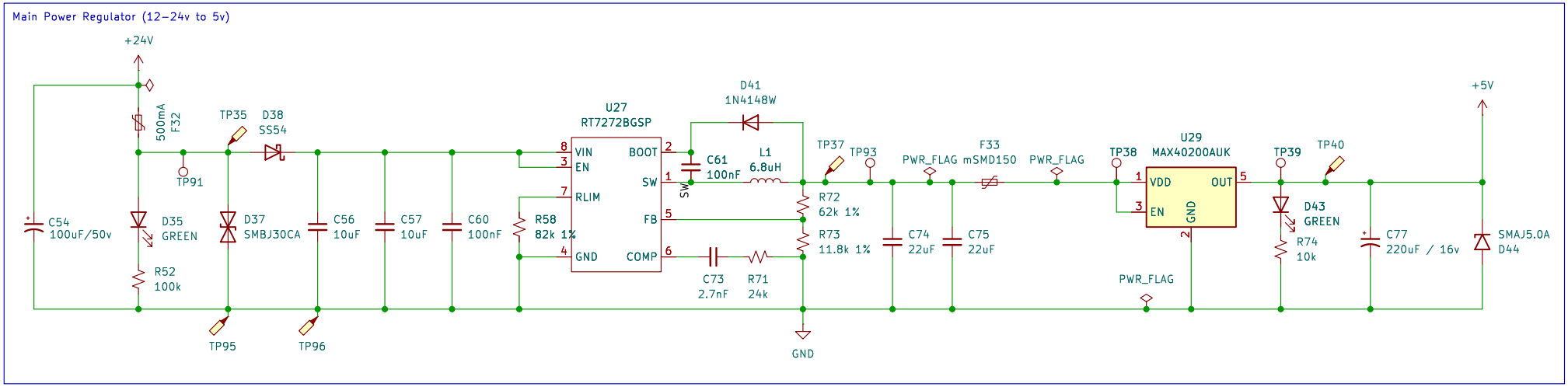

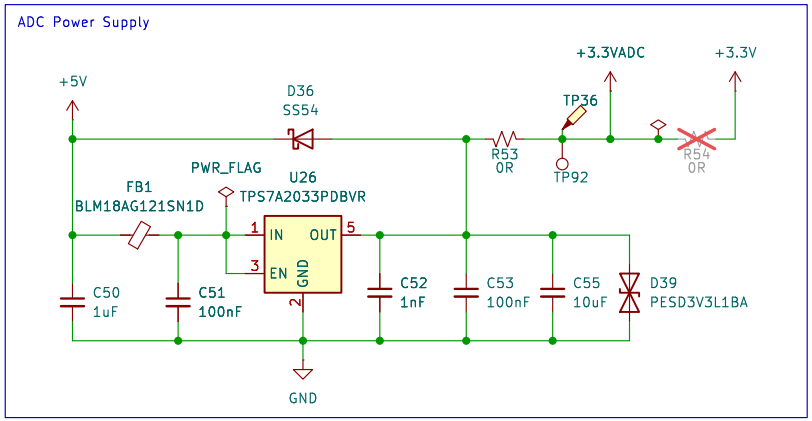

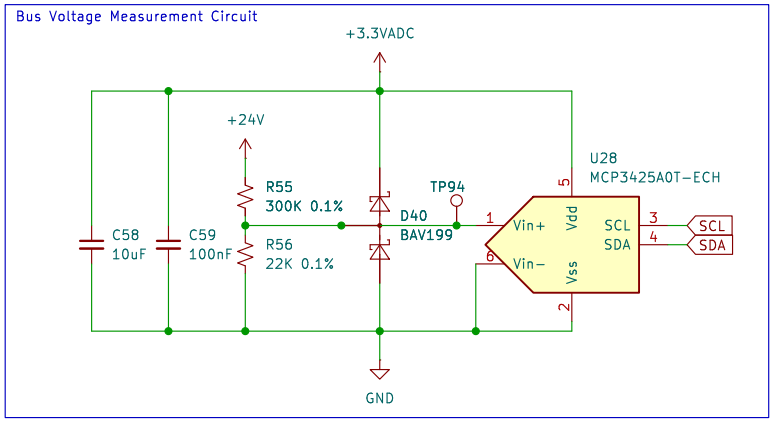

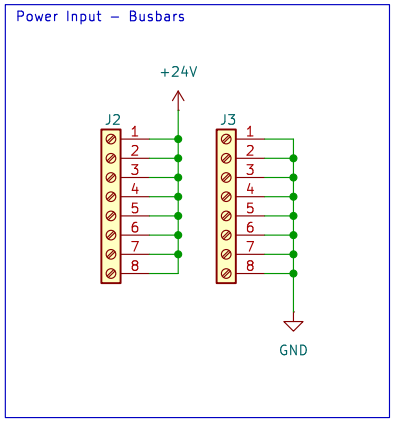

3.3v ADC Power Budget:

MCP3425: 0.145mA
INA226: 0.33mA * 8 = 2.64mA
LM75B: 0.28mA * 8 = 2.24mA
Total: 5.025mA

TPS7A20 Supply: 300mA

https://github.com/hoeken/frothfet

Sheet: /Power Supply/
File: power.kicad_sch

Title: FrothFET 8CH

Size: A4	Date: 2026-01-10	**Rev: F**
KiCad E.D.A. 9.0.6		Id: 14/14

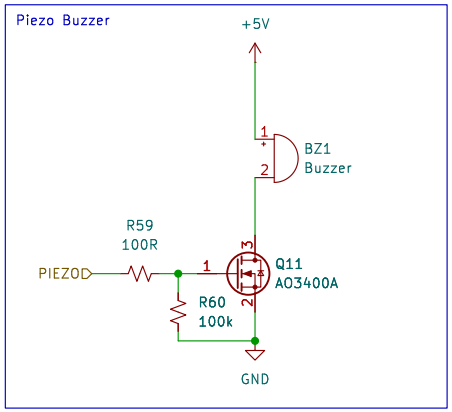

https://github.com/hoeken/frothfet

Sheet: /Piezo Buzzer/
File: piezo.kicad_sch

Title: FrothFET 8CH

Size: A4	Date: 2026-01-10	Rev: F
KiCad E.D.A. 9.0.6		Id: 16/14

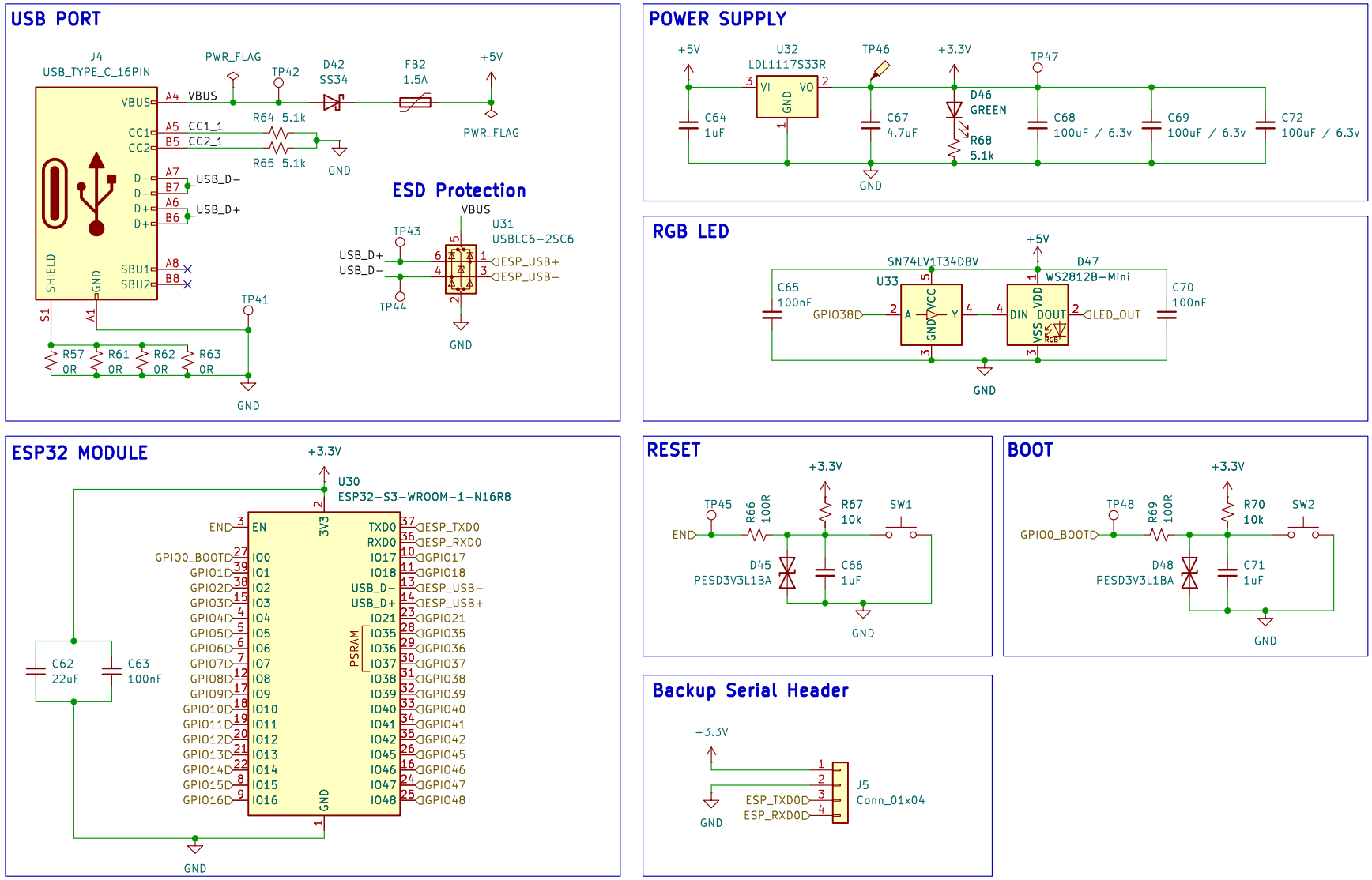

Originally forked from: github.com/eggsampler/ESP32−S3−Breakout
Updates based on www.waveshare.com/wiki/ESP32−S3−DEV−KIT−N8R8

Further design by Zach Hoeken

https://github.com/hoeken/frothfet

Sheet: /ESP32−S3/
File: esp32−s3.kicad_sch

Title: FrothFET 8CH

Size: A4	Date: 2026−01−10	**Rev: F**
KiCad E.D.A. 9.0.6		Id: 17/14